WIRING, CYC TIMER & MBVFS VALVE (CSS ONLY)

SUPPLY VOLTAGE: 460V/3PH/60HZ

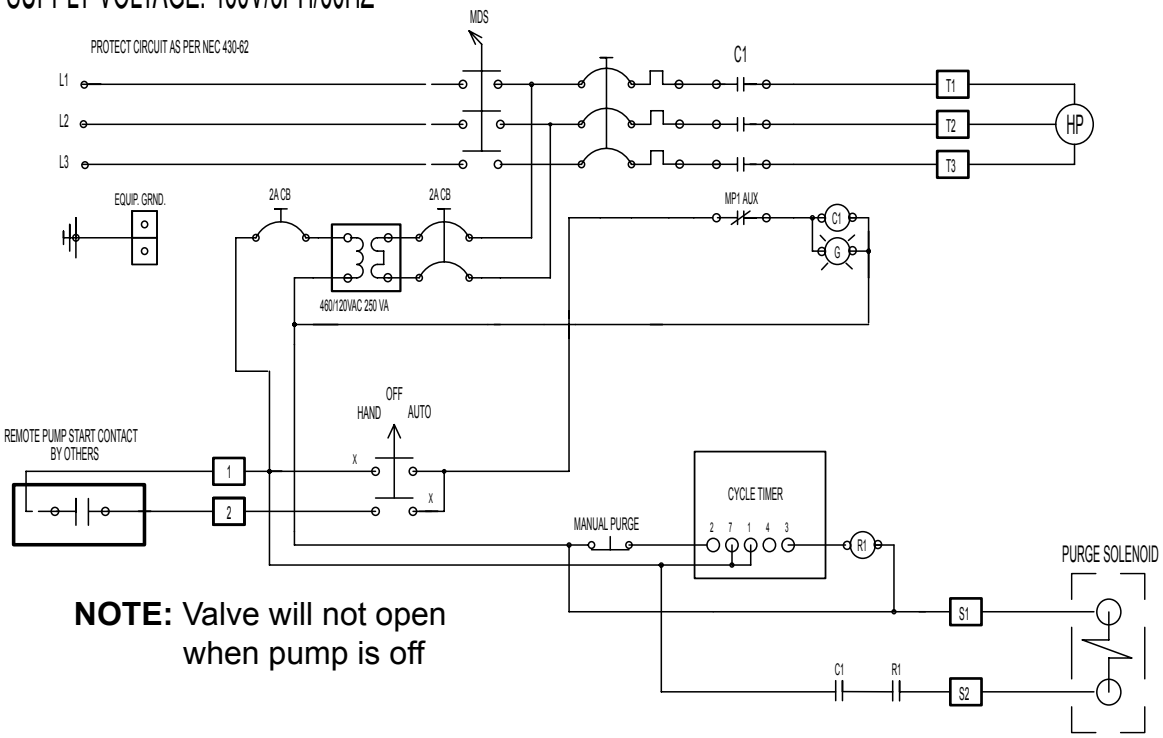

NOTE: Valve will not open when pump is off

SUPPLY VOLTAGE: 575V/3PH/60HZ

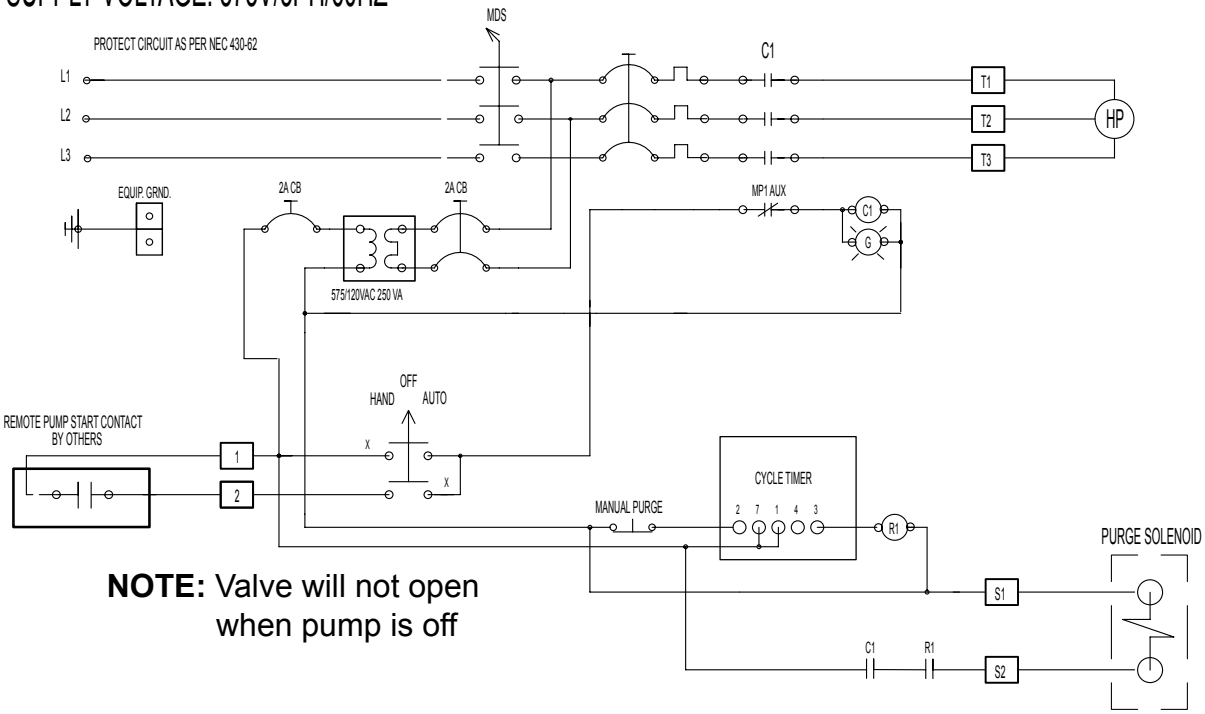

NOTE: Valve will not open when pump is off

1525 E. Sixth Street, Corona, CA. 92879 Phone: (951) 270-1776 Fax: (951) 735-0798
www.griswoldfiltration.com